forgegrid

BILD

USER MANUAL

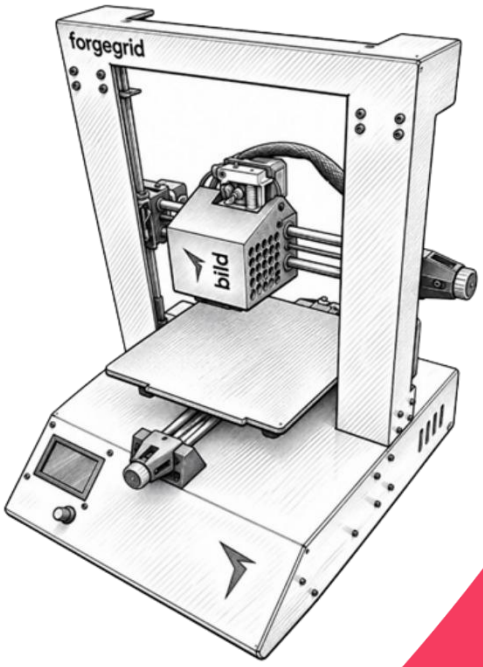

forgegrid

CONTENTS

DOCUMENT GUIDE 3

1. PRODUCT OVERVIEW 4
2. SAFETY 5
3. KNOW YOUR PRINTER 6
4. INITIAL SETUP 8
5. LCD CONTROLLER 8
6. LOADING AND UNLOADING FILAMENT 10
7. HOMING, BED LEVELING AND Z-OFFSET 11
8. FORGEGRID SLICER 12
9. SLICER SCREEN REFERENCE 13
10. SLICING AND EXPORTING 15
11. STARTING AND MONITORING A PRINT 17
12. REMOVING A FINISHED PRINT 18
13. FILAMENT AND MATERIALS 19
14. ROUTINE MAINTENANCE 20
15. TROUBLESHOOTING AND SUPPORT 21
16. WARRANTY 22
17. PRE-PUBLICATION VERIFICATION ..... **Error! Bookmark not defined.**

forgegrid

DOCUMENT GUIDE

This manual covers everyday setup, operation and care of the ForgeGrid Bild FDM 3D printer. Detailed fault diagnosis is intended to be supported by ForgeGrid video tutorials and customer support.

QUICK START AT A GLANCE

Step	Action
1	Remove shipping clips and check the printer.
2	Connect the power cable and switch on.
3	Install ForgeGrid Slicer on your computer.
4	Load filament.
5	Prepare and save G-code to the SD card.
6	Insert the SD card, select the file and start printing.
7	Observe the first layer.
8	Allow the print to finish and remove the part.

1 PRODUCT OVERVIEW

ForgeGrid Bild is a desktop FDM 3D printer intended for a combination of beginner, hobbyist, educational and professional users. It uses 1.75 mm filament and a 0.4 mm brass nozzle. The printer has a flexible magnetic PEI build surface and a non-heated bed.

KEY SPECIFICATIONS

Specification	ForgeGrid Bild
Printing technology	FDM
Build volume	160 × 160 × 150 mm
Nozzle diameter	0.4 mm
Nozzle material	Brass
Filament diameter	1.75 mm
Maximum nozzle temperature	220°C
Bed	Non-heated
Build surface	Flexible magnetic PEI sheet
Extrusion system	Direct drive
Recommended print speed	45 mm/s
Maximum stated print speed	80 mm/s
Tested materials	PLA, PLA+, PETG and TPU

2 SAFETY

HOT SURFACES

The nozzle and heater block become hot during operation. Do not touch the hotend or nozzle while heated or until it has cooled sufficiently.

MOVING PARTS

Keep fingers, hair, clothing, tools and loose cables away from the print head, belts, pulleys and moving axes while the printer is operating.

ELECTRICAL SAFETY

Use the supplied/approved power cable and a properly earthed mains outlet. Switch the printer off and disconnect power before opening an enclosure or working on electrical components. Do not operate the printer if wiring or connectors appear damaged.

EMERGENCY STOP

STOP If you observe smoke, uncontrolled heating, an electrical/burning smell or unexpected movement, stop the print and switch the printer off. Disconnect power if safe to do so and contact ForgeGrid support.

GENERAL PRECAUTIONS

- Place the printer on a stable, level surface.
- Keep ventilation openings clear.
- Keep liquids away from the printer.
- Keep children and pets away from hot and moving components.
- Use only validated material profiles and G-code prepared for ForgeGrid Bild.

3 KNOW YOUR PRINTER

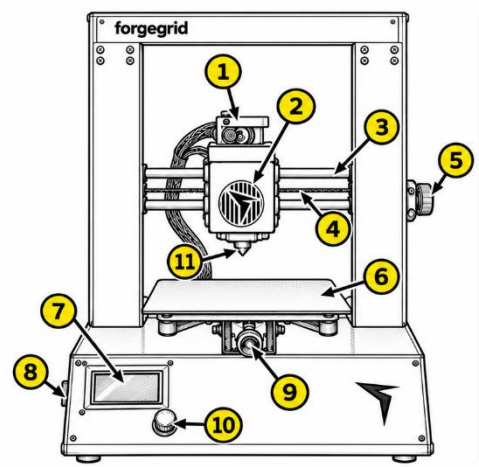

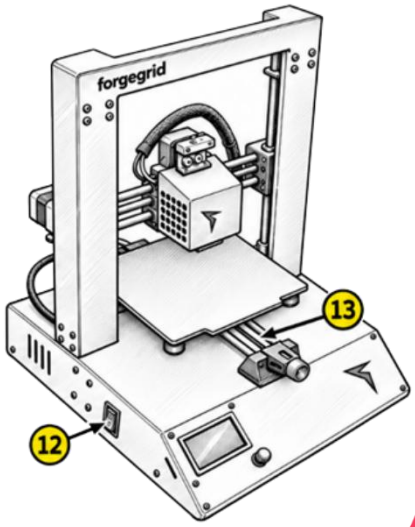

1. Extruder
2. Print head
3. X-axis Linear rod
4. X-axis belt
5. X-axis tensioner
6. Build Plate
7. LCD Screen
8. SD Card
9. Y-axis Tensioner
10. Selector Knob
11. Nozzle (HOT!)
12. Power Switch
13. Y-Axis Belt

Component	Purpose
Print head	Carries the hotend and deposits molten filament.
Extruder	Feeds filament into the hotend.
PEI build sheet	Removable printing surface.
LCD controller	User interface for printer operation.
Control knob	Rotate to navigate; press to select.
X / Y axes	Position the print head and build plate.

LCD CONTROL KNOB

- Rotate counterclockwise to move forward through menu options.
- Rotate clockwise to move backward through menu options.

- Press the knob to select the highlighted option.

POWER SWITCH AND TENSIONING KNOBS

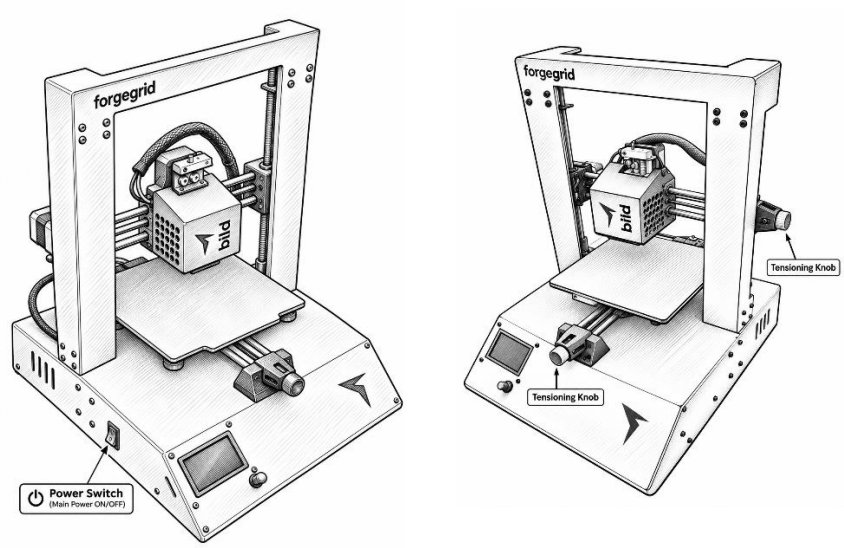

Turn the appropriate knob to adjust the corresponding belt tension. Adjust only as needed; do not overtighten. Tighten it just enough so that you are able to move the bed and the gantry by hand but not so loose that it slips.

4 INITIAL SETUP

The printer is supplied assembled. Complete the following checks before first use:

1. Place the printer on a stable, level surface.
2. Remove all Shipping clips from belts and tensioner.
3. Check the X and Y-axis belts. Use their separate tensioning knobs to adjust tension if required. Tighten it just enough so that you are able to move the bed and the gantry by hand but not so loose that it slips.
4. Check that the power cable is properly connected.
5. Press the side power switch to turn the printer on.
6. Confirm that the LCD screen turns on.

The printer does not automatically move its axes when first powered on. The SD card does not need to be inserted before switching on.

IMPORTANT Do not confuse shipping clips with belt tensioning hardware. Remove only temporary shipping restraints. Do not overtighten belts.

5 LCD CONTROLLER

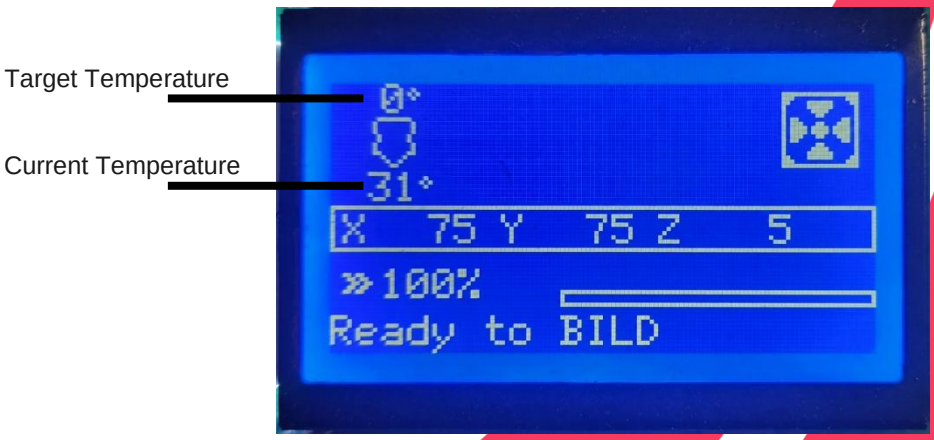

The main menu provides access to the printer's information, motion, temperature, configuration and media functions.

MENU NAVIGATION

Rotate the knob counterclockwise to move forward through options. Rotate clockwise to move backward. Press the knob to select an option.

INFORMATION SCREEN

The information screen displays printer status and axis position information.

6 LOADING AND UNLOADING FILAMENT

LOADING FILAMENT

1. From the LCD info screen, press the knob and scroll down to find and select **Temperature**.
2. In **Temperature**, Select **Nozzle** and set the temperature to **180°C**.
3. Wait until the nozzle reaches the set temperature.
4. Press and hold the extruder lever.
5. Feed the filament forward through the white tube on the extruder until filament emerges and drips from the nozzle.
6. Release the lever.

Prepare the filament end so it is straight, consistent and not necked, crushed or distorted. Remove the previous filament completely before loading a different material.

UNLOADING FILAMENT

1. Open **Temperature** → **Nozzle** and set **180°C**.
2. Wait until the nozzle reaches temperature.
3. Press and hold the extruder lever.
4. Push the filament forward briefly, then pull it out manually and **promptly**.
5. Release the lever.

CAUTION The nozzle and molten filament are hot. Keep fingers clear of the nozzle and do not touch extruded material.

7 HOMING, BED LEVELING AND Z-OFFSET

AUTO HOME

On the LCD, select **Motion** → **Homing** → **Auto Home**. The printer moves its axes to their home positions.

BED LEVELING

1. Select **Motion** → **Bed Leveling** → **Level Bed**.
2. Allow the inductive probe to measure the bed at its programmed points.
3. Keep the printer clear of obstructions while probing takes place.

The printer is configured to perform bed probing automatically as part of the print-start process. Manual probing is available when required.

Z-OFFSET WIZARD

1. Select **Motion** → **Z Offset Wizard**.
2. Follow the on-screen prompts to move the nozzle toward the build surface.
3. Adjust until the nozzle is at the intended clearance. A sheet of paper may be used as a reference; slight resistance is the stated indication of a suitable gap.
4. Exit the wizard.
5. Open **Configuration** → **Store Settings** to save the adjustment.

CAUTION Take care not to drive the nozzle into or scratch the PEI sheet. If unsure, stop and contact ForgeGrid support.

8 FORGEGRID SLICER

ForgeGrid Slicer is supplied on the SD card as a Windows installer (.exe) and is also available from the ForgeGrid website. The printer profile and material profiles are included in the software.

INSTALLATION

1. Insert the supplied SD card into your computer.
2. Locate and run the ForgeGrid Slicer .exe installer.
3. Follow the installer prompts to complete installation.
4. Open ForgeGrid Slicer.

ADDING THE FORGEGRID BILD PROFILE

Use the supplied screenshots as the visual guide: open the printer selector, choose **Add printer**, choose **ForgeGrid printer**, select the non-networked printer option, expand the ForgeGrid manufacturer list, select **forgegrid bild**, and confirm with **Add**.

The profile-selection screenshots supplied by ForgeGrid are included in the companion visual assets. Follow the exact on-screen labels in the software version provided.

PREPARING A MODEL

1. Open/import an STL model.
2. Confirm that the ForgeGrid Bild profile is selected.
3. Select the material profile and a suitable quality preset.
4. Adjust print settings as required.
5. Select **Slice**.
6. Review the sliced model and estimated print information.
7. Select **Save to Disk** and save the G-code to the SD card.

IMPORTANT Use G-code generated for ForgeGrid Bild. Do not run files prepared for a different printer unless they have been checked for compatibility.

9 SLICER SCREEN REFERENCE

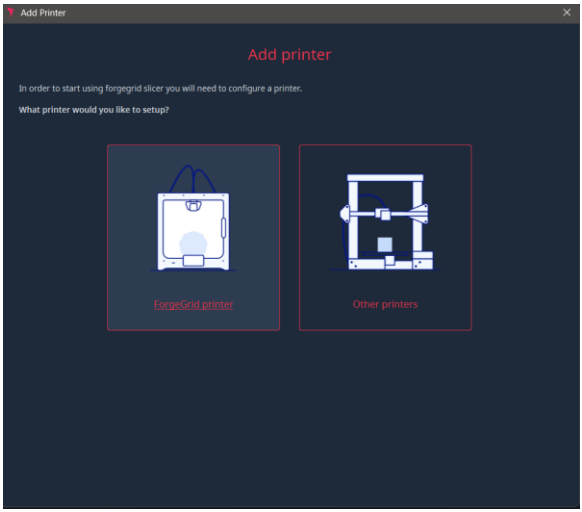

Add Printer —> choose ForgeGrid printer.

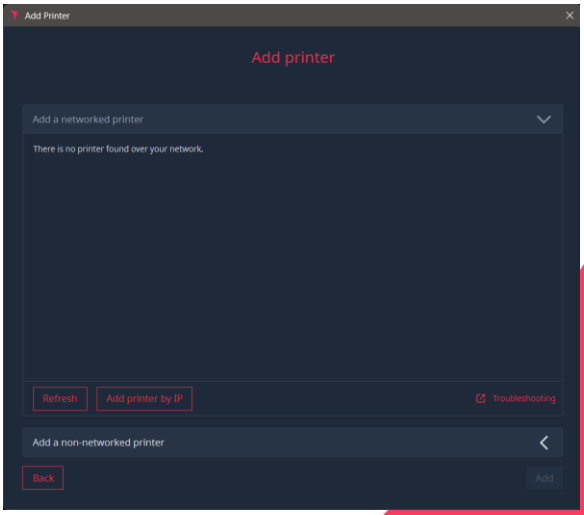

Select add a non-networked printer

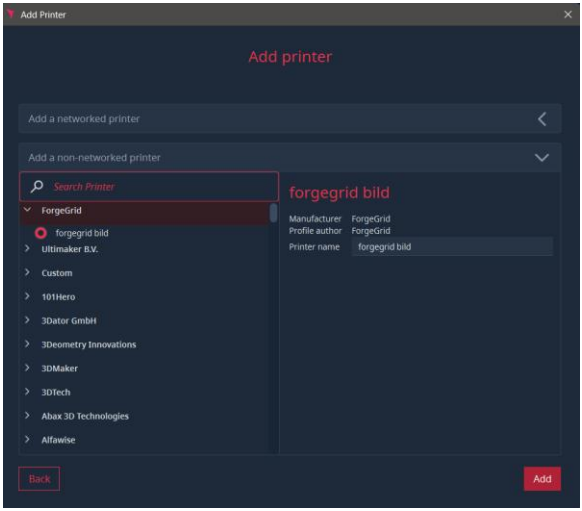

Add forgegrid bild

10 SLICING AND EXPORTING

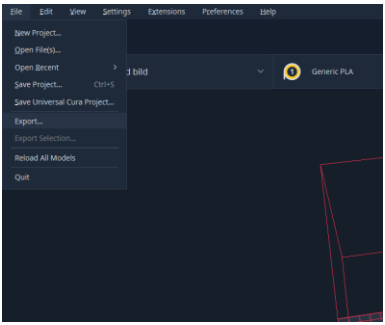

In files menu, select Open files and import your stl file.

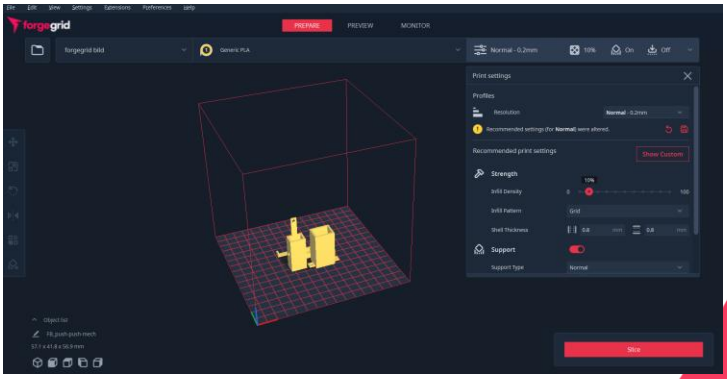

Model on the build plate and print settings panel.

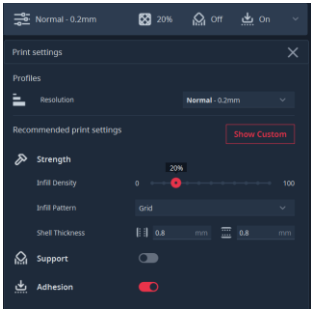

File menu reference from ForgeGrid Slicer.

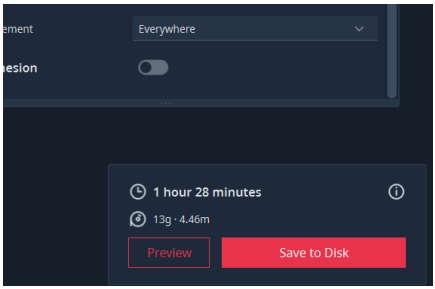

After slicing, review the estimate and select Save to Disk.

The exact location of the export command may vary with the installed software build. Use the visible **Save to Disk** button after slicing.

11 STARTING AND MONITORING A PRINT

1. Save the sliced G-code file to the SD card.
2. Insert the SD card into the printer.
3. On the LCD, open **Media**.
4. Select the required print file.
5. Select **Print** and start the job.

The printer automatically heats the nozzle, homes the axes and performs its configured bed probing routine before printing.

FIRST-LAYER CHECK

Ideally, observe the first layer of every new print. Confirm that filament is being deposited consistently and is adhering to the PEI surface. If the nozzle is dragging, the print is lifting, or the first layer is clearly failing, stop the print and check the build surface and Z-offset.

DURING PRINTING

Use **Pause Print** to pause a job and **Stop Print** to cancel it. Avoid changing settings during a print unless you understand the effect.

POWER-LOSS RECOVERY

If power is interrupted, switch the printer back on. When the printer displays the resume prompt, select **Yes**. The printer reheats and resumes the interrupted print. Resume availability depends on the printer retaining the recovery data.

12 REMOVING A FINISHED PRINT

Allow a few seconds after the print finishes before attempting removal. If the part releases easily, it may be removed with the PEI sheet in place. If it remains stuck, remove the flexible magnetic PEI sheet and flex it gently to release the part.

Pliers are included as a multipurpose tool. Use tools carefully and keep them away from your hands and the PEI coating. Do not force a part off the sheet or use sharp tools in a way that may damage the surface.

Reinstall the sheet flat and correctly aligned before the next print.

PEI SHEET CLEANING

When cleaning is necessary, wash the PEI sheet with soap and water, then dry it fully before reinstalling. Avoid abrasive cleaning methods that could damage the surface.

13 FILAMENT AND MATERIALS

The following materials have been tested on ForgeGrid Bild: PLA, PLA+, PETG and TPU. Material performance depends on filament formulation, print profile, ambient conditions and part geometry.

Material	Status
PLA	Tested
PLA+	Tested
PETG	Tested
TPU	Tested

ForgeGrid Slicer includes material profiles. Select the appropriate profile before slicing. Do not exceed the printer's stated maximum nozzle temperature of **220°C**.

MATERIAL SETTINGS

Exact nozzle temperatures, print speeds, cooling settings and adhesion recommendations varies with material and brands. Use the supplied validated profiles rather than manually guessing settings.

NON-HEATED BED

ForgeGrid Bild has a non-heated build surface. Use the material profiles supplied with ForgeGrid Slicer and ensure the PEI surface is clean and dry before printing.

14 ROUTINE MAINTENANCE

Interval	Task
When necessary	Clean the PEI sheet with soap and water; dry fully.
Monthly	Lubricate the lead screws with suitable grease.
As required	Check X- and Y-axis belt tension and adjust using the separate knobs if needed.

LEAD SCREW LUBRICATION

Apply a suitable grease to the lead screws once every month. Use only a small, controlled amount and avoid contaminating the build surface, belts, wiring or printed parts.

BELT TENSION

The printer has separate tensioning knobs for the X- and Y-axis belts. Check tension when required and adjust the relevant knob. Do not overtighten.

15 TROUBLESHOOTING AND SUPPORT

Detailed troubleshooting demonstrations will be provided through ForgeGrid video tutorials and online support. Do not dismantle electrical or heating components unless instructed by an authorized technician.

STOP USING THE PRINTER AND CONTACT SUPPORT IF:

- Smoke, burning smell or abnormal heating is observed.
- A heater or temperature sensor behaves abnormally.
- The probe fails to trigger or the printer moves unexpectedly.
- Wiring, connectors or structural components appear damaged.
- A fault persists after the approved user checks.

CUSTOMER SUPPORT

Email: forgegrid@anthread.com
WhatsApp / Helpline: +92 326 9395502

When contacting support, provide the purchase details and a clear description or video of the issue.

16 WARRANTY

ForgeGrid Bild is supplied with a **six-month warranty**. The customer should retain the physical warranty card and proof of purchase.

WARRANTY SUPPORT PROCESS

1. Contact the ForgeGrid helpline or email support.
2. Follow the troubleshooting guidance provided online or by the support team.
3. If the issue cannot be resolved remotely, arrange to bring the printer in for inspection/service.

SUPPLIED IN THE BOX

- ForgeGrid Bild printer
- Physical warranty card
- User documentation
- Sample filament
- SD card
- Pliers (multipurpose tool)